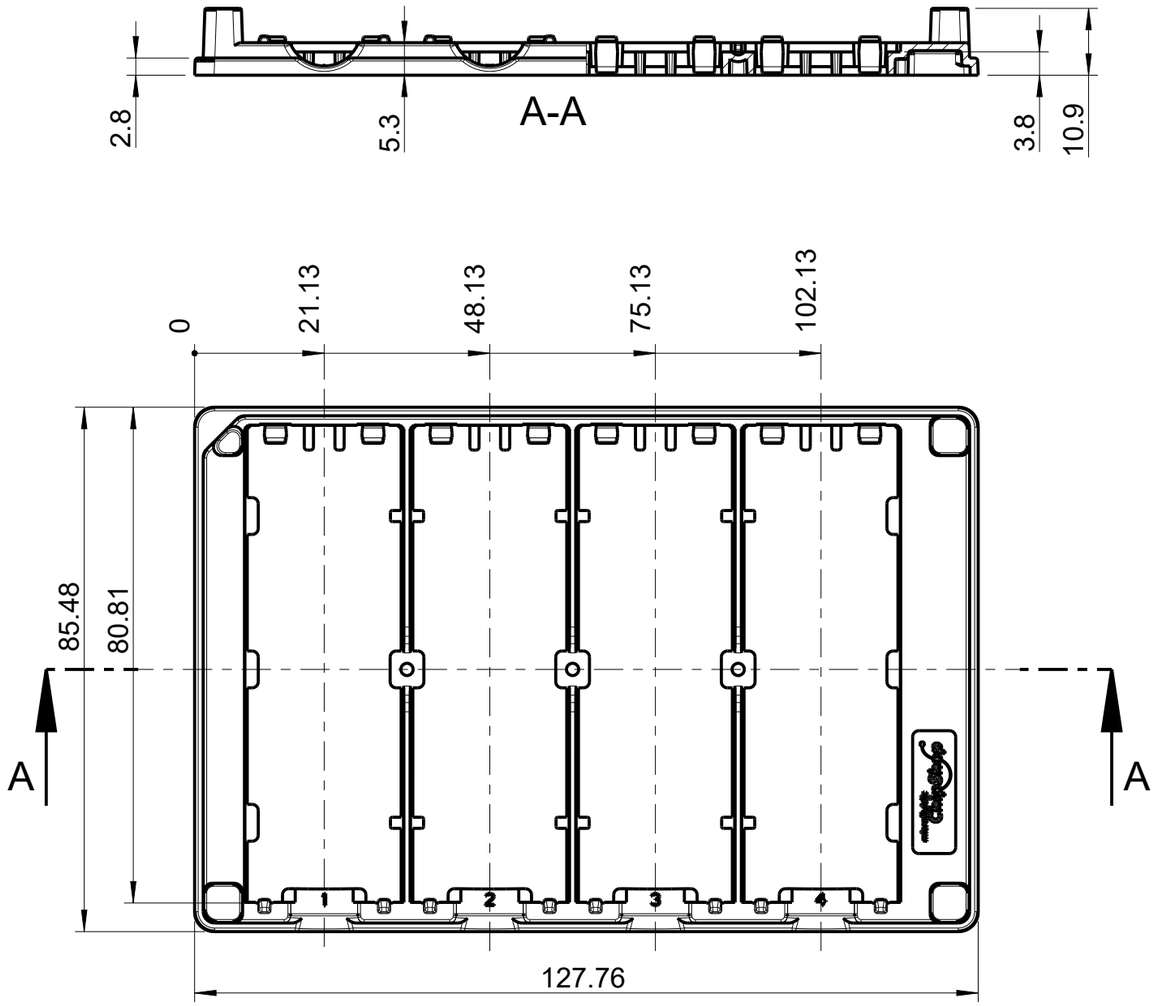

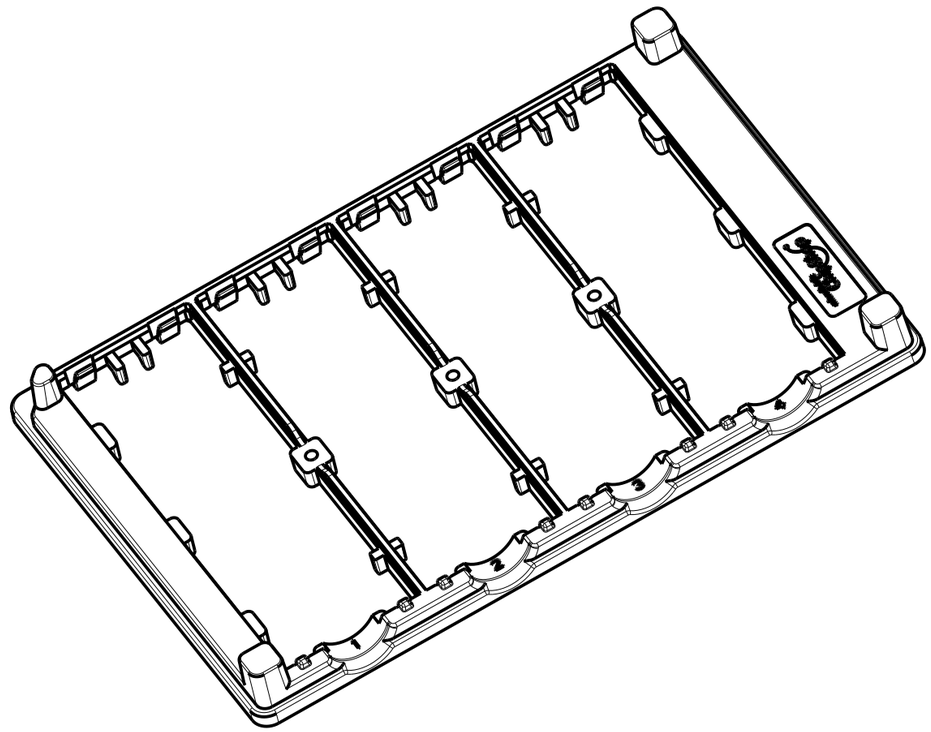

all values without dimensions are in mm

microfluidic ChipShop		Tolerance ISO 8015 General Tolerance ISO 2768-mK
Handling Frame Low Skirt	Fluidic 353	Scale 1:1
	Page (1/1)	Created/changed on: 25.10.2016
	Size A3	

MV-FO003/1_A3

microfluidic ChipShop GmbH • Stockholmer Str. 20 • 07747 Jena • Germany • Phone: +49 (0) 3641 34705-0 • Fax: +49 (0) 3641 34705-90 • inquiries@microfluidic-ChipShop.com • www.microfluidic-ChipShop.com